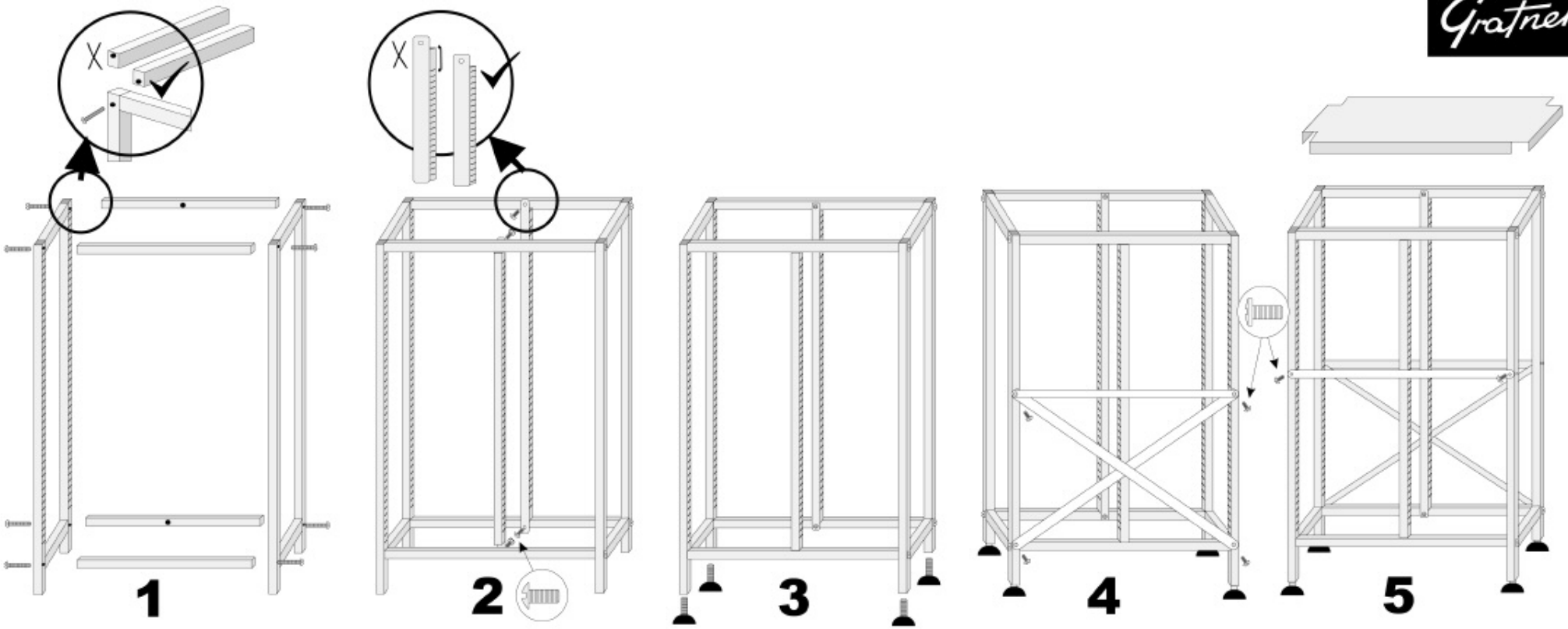

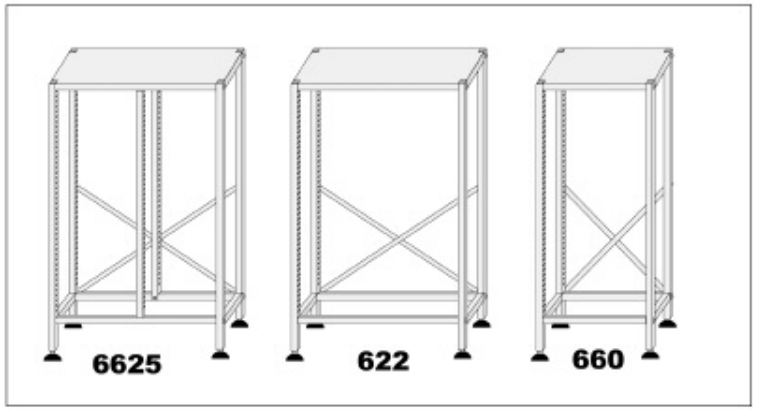

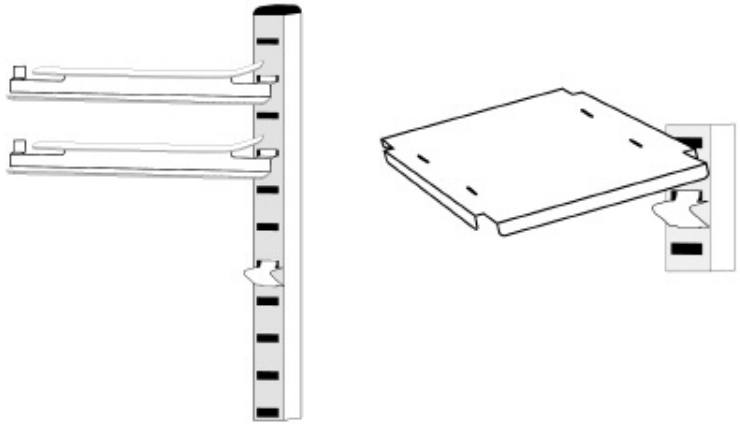

01/07

129 Bradley Hall Trading Estate, Bradley Lane, Standish, Wigan, WN6 0XQ **Phone:** 01257 426351 **E-mail:** orders@e4e.co.uk **Website:** www.e-quip4education.co.uk